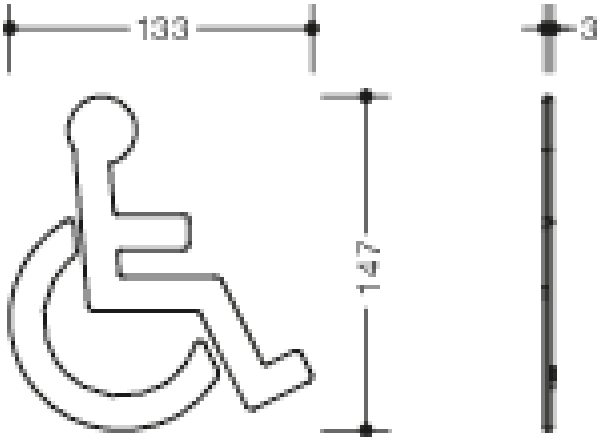

Similar picture

Dimensions in mm

Properties

Symbol, accessibility

- self-adhesive
- 145 mm high, 140 mm wide and 3 mm thick
- made of high-quality matt polyamide in HEWI colours 99 (pure white), 98 (signal white), 97 (light grey), 95 (stone grey), 92 (anthracite grey) and 90 (jet black)

Awards

Colours / Surfaces

- 99 (pure white)
- 98 (signal white)
- 97 (light grey)
- 95 (stone grey)
- 92 (anthracite grey)
- 90 (jet black)

HEWI Heinrich Wilke GmbH
Postfach 1260
D-34442 Bad Arolsen

Telephon: +49 5691 82-0
Fax: +49 5691 82-319

info@hewi.de
www.hewi.com