Similar picture

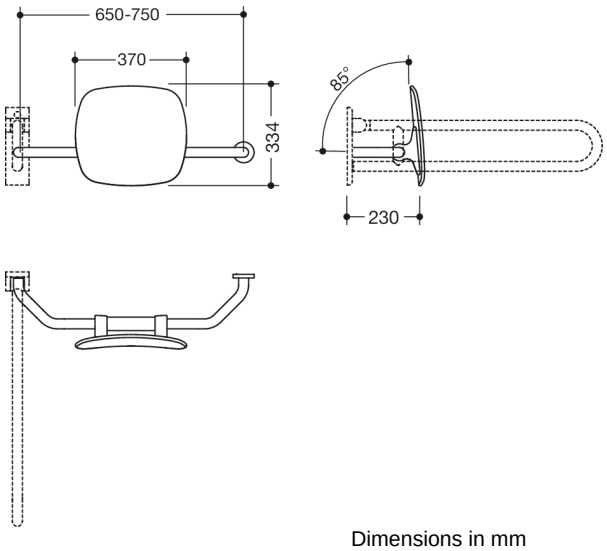

Dimensions in mm

Properties

Back support, Series 801

- back rest with rods and fixing rosettes on both sides
- user-friendly wall distance of 230 mm
- serves to support the back on the WC
- right-hand version
- one-sided installation on the wall with rosettes (left)
- one-sided installation on hinged support handles or wall support handles with wall plate (right)
- adjustable on site
- 650 to 750 mm wide, 230 mm deep, back rest 334 mm high and 370 mm wide, rod diameter 33 mm, rosette diameter 70 mm
- with continuous, corrosion-protected steel core
- back rest made of synthetic material in HEWI colour 98 (signal white)
- connection made of high-quality, matt polyamide in the HEWI colours 99 (pure white), 98 (signal white), 97 (light grey), 95 (rock grey) and 92 (anthracite grey)

Awards

Colours / Surfaces

- 99 (pure white)
- 98 (signal white)
- 97 (light grey)
- 95 (stone grey)
- 92 (anthracite grey)

HEWI Heinrich Wilke GmbH
Postfach 1260
D-34442 Bad Arolsen

Telephon: +49 5691 82-0
Fax: +49 5691 82-319

info@hewi.de
www.hewi.com