HEWI Shower grab rail with sideways adjustable vertical support bar and shower head holder
950.35.46091

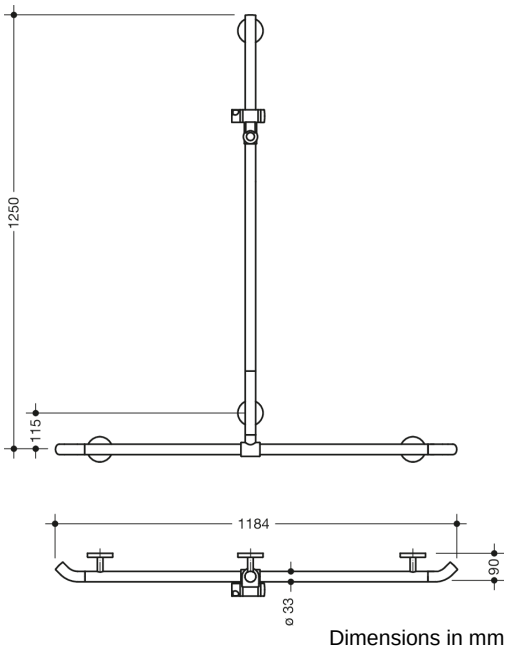

Dimensions in mm

Properties

Shower, Bath handrail with shower rail System 800 K

- Rails arranged vertically and horizontally, Rods connected at right angles with shower head holder
- with 45° end bends pointing towards the wall
- With vertical rail with shower head holder that can be moved to the side (for installation)
- Shower, Bath handrail made of high-quality polyamide
- Rods according to HEWI colour chart
- Shower holder, supports and roses made of high-quality polyamide in the HEWI colour 98 (signal white)
- With continuous, corrosion-resistant steel core
- Vertical length 1250 mm, Horizontal length 1184 mm
- Depth 90 mm , Rod diameter 33 mm
- Wall connection with filigree supports straight to the wall (diameter 18 mm) and flat rosettes
- Rosette diameter 80 mm, cap height 13 mm
- Shower head holder can be continuously tilted and, after pulling or pushing a large lever, its height can be adjusted
- Conical adapter on shower head holder makes it easier to hook in the shower head
- Suitable for hand showers from various manufacturers
- Simple installation thanks to individually mountable fastening plates made of high-quality stainless steel for attaching the shower tray., Bath handrail
- including corrosion-free HEWI fixing material
- Please note when using with suspended seats: Compatibility check required.
- tested up to 200 kg when used with HEWI fixing material
- Recommended maximum weight of the user: 150 kg
- A detailed list of the possible combinations of grab rails, Angled rails and shower handrails with matching hanging seats can be found in our online catalogue in the download area of the respective product.

Colours / Surfaces

92 (anthracite grey)
33 (ruby red)

HEWI Heinrich Wilke GmbH
Postfach 1260
D-34442 Bad Arolsen
Telephon: +49 5691 82-0
Fax: +49 5691 82-319
info@hewi.de
www.hewi.com