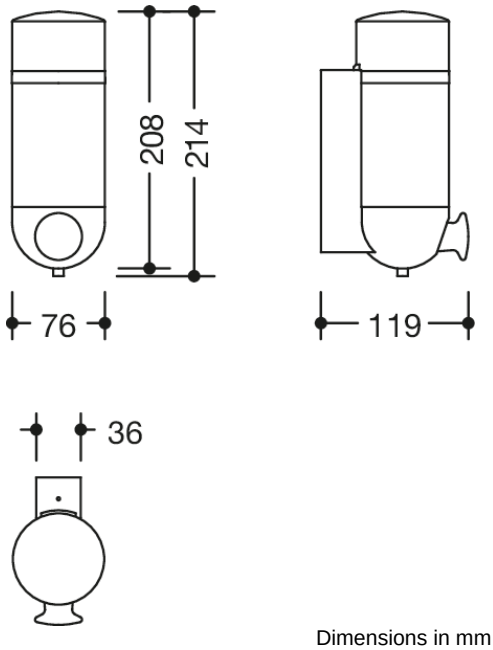

Dimensions in mm

Properties

System 800 K Soap dispenser

- cylindrical container in ring-shaped, wall-mounted bracket
- used to hold standard liquid soap
- allows one-hand operation
- soap dosage control by means of a large push-button at the front
- container can be removed
- not suitable for disinfectant!
- anti-theft protection through concealed screw fixing
- lockable container lid
- wall-mounted base to conceal drill holes must be ordered separately (477.06.E04 99)
- 76 mm wide, 214 mm high, 119 mm deep, diameter of container 76 mm, capacity 500 ml
- wall mounting base and holder made of high-quality polyamide in the HEWI colour 99 (Pure white)
- push-button made of high-quality polyamide according to HEWI colour chart
- container and lid made of matt white transparent synthetic material

Colours / Surfaces

92 (anthracite grey)
33 (ruby red)

HEWI Heinrich Wilke GmbH
Postfach 1260
D-34442 Bad Arolsen

Telephon: +49 5691 82-0
Fax: +49 5691 82-319

info@hewi.de
www.hewi.com