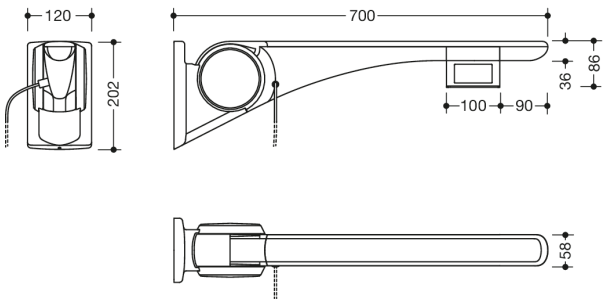

Dimensions in mm

Properties

Folding support rail Basic with WC flush actuation E version right from the LifeSystem range

- more stable, One-arm folding support handle
- Non-slip and ergonomic grip pad
- serves to hold, Supporting and straightening
- High-quality plastic surface and scratch-resistant powder coating
- maximum product rigidity increases stability and creates a secure gripping feeling for the user
- with flush release (electric version)
- Version on the right (from the user's point of view)
- The blue button (wave symbol) is used to trigger the WC flush (convex, palpable pressure point)
- Cable with free cable ends for wall connection
- Includes white cover for flush-mounted box
- Control voltage max. 30 V = SELV, PELV, switching current up to max. 2 A
- Suitable for all standard concealed cisterns with electrical control
- Folds upwards and downwards with slight cushioning
- low-maintenance, Permanently smooth-running joint, Preset ex works
- a defined stop prevents, that the folding support handle touches the wall
- Projection 700 mm , width 120 mm , Wall panel 202 mm high
- Grip pad 58 mm wide
- Aluminium cantilever, powder-coated in the HEWI colours signal white, glossy with plastic grip pad in SD (signal white), matt) and GU (anthracite, matt) or bracket anthracite, glossy with grip pad in TB (signal white, matt) and DR (anthracite, matt), with high-gloss chrome-plated design elements
- Paper roll holder 802.50.01160 and back support 802.51.90.. can be retrofitted - simple assembly thanks to separate installation of the stainless steel mounting plate, matt polished
- concealed, Corrosion-free and tested HEWI fixing material for different wall structures (to be ordered separately)

Sealing tape for sealing the fixing points is included in the delivery

- tested up to 150 kg when used with HEWI fixing material
- Recommended maximum weight of the user: 150 kg
- is produced in accordance with CE and UKCA Regulation (EU) 2017/745 on medical devices

Awards

Certificates

HEWI Heinrich Wilke GmbH
Postfach 1260
D-34442 Bad Arolsen

Telephon: +49 5691 82-0
Fax: +49 5691 82-319

info@hewi.de
www.hewi.com

Colours / Surfaces

TB (anthracite high gloss
-white matt)

SD (white polish
-white matt)

GU (white polish
-anthrac.grey matt)

DR (anthracite high gloss
-anthracite matt)

HEWI Heinrich Wilke GmbH
Postfach 1260
D-34442 Bad Arolsen

Telephon: +49 5691 82-0
Fax: +49 5691 82-319

info@hewi.de
www.hewi.com