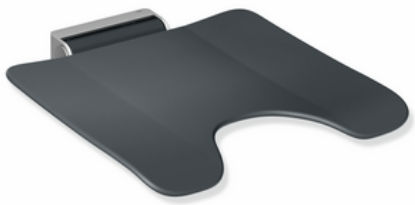

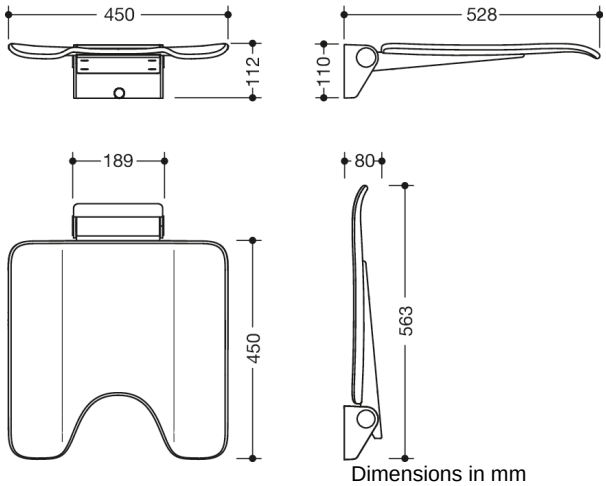

Properties

Mobile hinged seat, System 900

- Construction consisting of wall console and continuous seat surface
- anti-slip, textured seat made of synthetic material in HEWI colours 98 (signal white) and 92 (anthracite grey)
- Aluminium seat reinforcement, powder coated in the colour of the seat
- Wall bracket made of high-quality stainless steel, matt ground
- Seat with hygiene cut-out can be folded up to save space
- Seat depth when folded up 77 mm
- for mobile use
- for easy and flexible retrofitting on existing, pre-assembled mounting plate: 900.51.001XA (to be ordered separately)
- Quick and tool-free installation by simply attaching the seat
- Secured with fixing screw
- 450 mm wide, 528 mm deep and 112 mm high
- Seat 450 mm wide and 450 mm deep
- for mounting with non-corrosive and tested HEWI fixing material for different wall systems (to be ordered separately).
- Sealing tape and sealing rods for sealing the mounting points according to DIN 18534 are included in the delivery
- tested up to 200 kg when used with HEWI fixing material
- Recommended maximum weight of the user: 150 kg
- Fulfils the DIN 18040 requirements, ÖNORM B1600/1601 and SIA 500

Awards

Colours / Surfaces

98 (signal white)
92 (anthracite grey)

HEWI Heinrich Wilke GmbH
Postfach 1260
D-34442 Bad Arolsen

Telephon: +49 5691 82-0
Fax: +49 5691 82-319

info@hewi.de
www.hewi.com