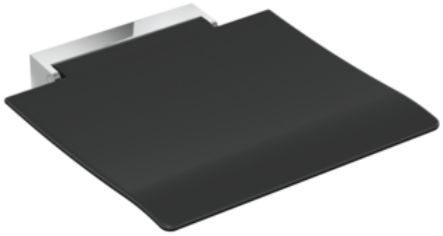

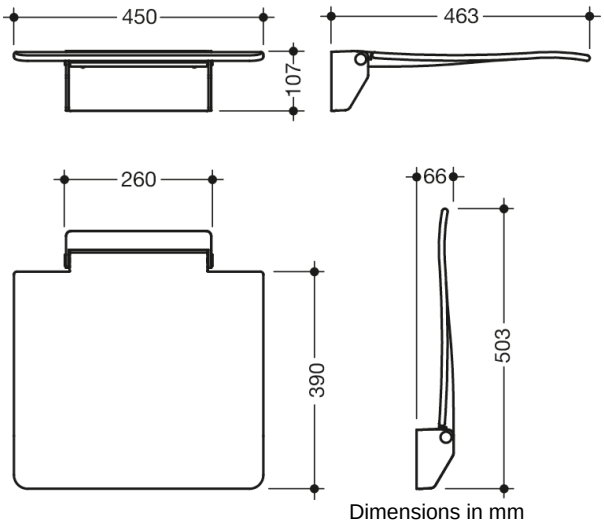

Dimensions in mm

Properties

Hinged seat 450

- Construction consisting of wall console and continuous seat surface
- Used for safe sitting in the shower area
- 450 mm wide, 463 mm deep and 107 mm high
- Wall bracket made of high-quality stainless steel, chrome-plated
- Seat made of glass fibre-reinforced polyamide in white and anthracite grey
- Ergonomically curved shape of the seat for high seating comfort
- Large radii on the outer edges of the seat reduce the risk of impact
- anti-slip, textured seat surface
- Seat can be folded up
- Seat depth when folded up: 66 mm
- No struts and fastenings visible when folded up
- can be combined with backrest 950.51.02090 - wall mounting with wall-specific HEWI fixing material
- Sealing tape and sealing rods for sealing the mounting points according to DIN 18534 are included in the delivery
- tested up to 200 kg when used with HEWI fixing material
- Recommended maximum weight of the user: 150 kg
- Fulfils the DIN 18040 requirements, ÖNORM B1600/1601 and SIA 500

Awards

Colours / Surfaces

98 (signal white)
92 (anthracite grey)

HEWI Heinrich Wilke GmbH
Postfach 1260
D-34442 Bad Arolsen

Telephon: +49 5691 82-0
Fax: +49 5691 82-319

info@hewi.de
www.hewi.com