HEWI Bath chair
950.51.41140

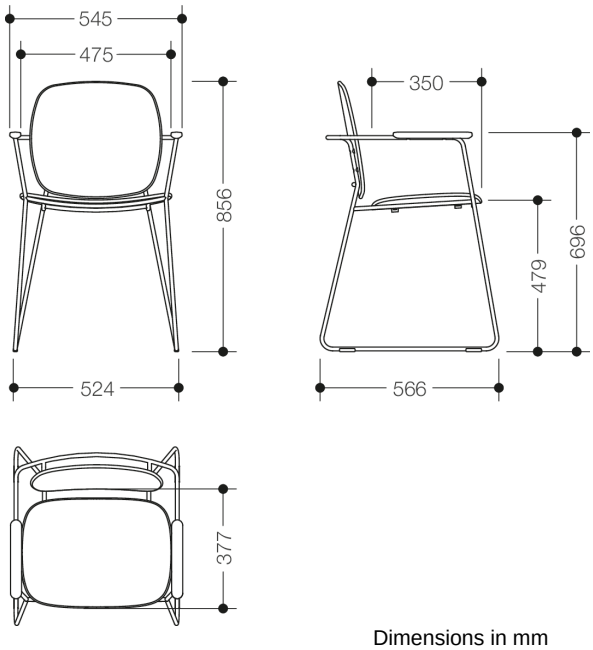

Dimensions in mm

Properties

Bath chair

- more mobile, multipurpose stool with towel rail and armrests from the re seat range
- suitable for the showers
- sophisticated round tube design combined with an ergonomic two-part seat
- generously sized,, pleasantly warm seat and backrest made of high-quality PIR plastic (post-industrial recycled), lightly textured
- Weight: 9.9 kg
- 856 mm tall, 545 mm wide
- seat 475 mm wide
- Seat height: 479 mm
- Seat, Backrest and arm pads made of high-quality PIR plastic (post-industrial recycled) in the HEWI colours JH (forest green) or JJ (dark granite grey) with high-quality chrome-plated frame
- equipped with black, anti-slip feet
- tested up to 200 kg
- Recommended maximum weight of the user: 150 kg

Awards

Colours / Surfaces

JJ (dark granite grey)
JH (forest green)

HEWI Heinrich Wilke GmbH
Postfach 1260
D-34442 Bad Arolsen

Telephon: +49 5691 82-0
Fax: +49 5691 82-319

info@hewi.de
www.hewi.com