Podobne zdjęcie

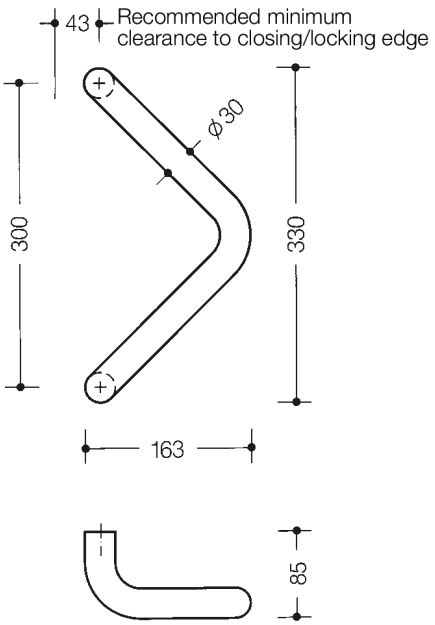

Wymiary w mm

Właściwości

Pull handle
System 111 made of solid coloured high-quality matt polyamide, diameter 30 mm, for one-sided and paired fixing on glass, wooden, PVC and metal doors (aluminium: 1 to 3 chamber, steel: 1 chamber profiles),
Load bearing capacity under alternating load 100 kg on wooden and metal doors, 50 kg on PVC doors, with 2 fixing points, fixing outside the lock area or within the lock area, as well as fixing through the lock. Handle with open angle - 90 degrees - in curved shape, with straight supports, for mounting on full leaf doors, in conjunction with BA5.0 for framed doors, fulfils the handle requirements of the guidelines of the German Federal Association of Accident Insurance Funds (Bundesverband der Unfallkassen e. V. - BUK) - safe distance from the closing edge 25 mm. Centre-to-centre 300 mm

Wyróżnienia

Kolory / Powierzchnie

99 (czysta biel)
90 (czerń jetowa)

HEWI Heinrich Wilke GmbH
Sp. z o.o. Oddz. w Polsce
Ul. Puławska 354/356
02-819 Warszawa
Tel.: 22 330 00 51
info@hewi.pl
www.hewi.com