Podobne zdjęcie

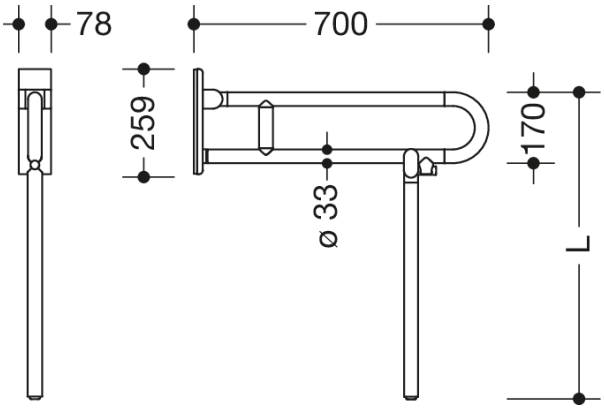

Wymiary w mm

Właściwości

Series 801 mobile folding support handle

- with customised floor support
- Two parallel rails, arranged on top of each other, bars joined together by a connecting arch
- Used for holding and supporting
- Can be folded upwards and folded downwards with braked movement
- for mobile use
- for easy and flexible retrofitting on existing, preassembled mounting plate: 950.50.016, must be ordered separately
- toolless and quick installation by simple attachment of the hinged support rail
- secured by fixing screw to prevent unintentional removal
- tested up to 150 kg when used with HEWI fixing material
- Recommended maximum weight of the user: 150 kg
- Projection 700 mm , Height 252 mm and width 78 mm , Rail 33 mm in diameter
- With continuous, corrosion-protected steel core - made of high-quality polyamide according to HEWI colour chart
- Toilet roll holder 801.50.011, WC flush release (radio) 801.50.060 retrofittable
- is produced in accordance with CE and UKCA Regulation (EU) 2017/745 on medical devices

Wyróżnienia

BEST OF DECADE
universal design company

Certyfikaty

CE

Kolory / Powierzchnie

99 (czysta biel)	92 (szary antracytowy)	55 (błękit akwatyczny)
98 (sygnał biały)	90 (czerń jetowa)	50 (stalowoniebieski)
97 (jasnoszary)	86 (piasek)	33 (rubinowa czerwień)
95 (szary kamień)	84 (umbra)	18 (żółta musztarda)

HEWI Heinrich Wilke GmbH
Sp. z o.o. Oddz. w Polsce
Ul. Puławska 354/356
02-819 Warszawa
Tel.: 22 330 00 51
info@hewi.pl
www.hewi.com