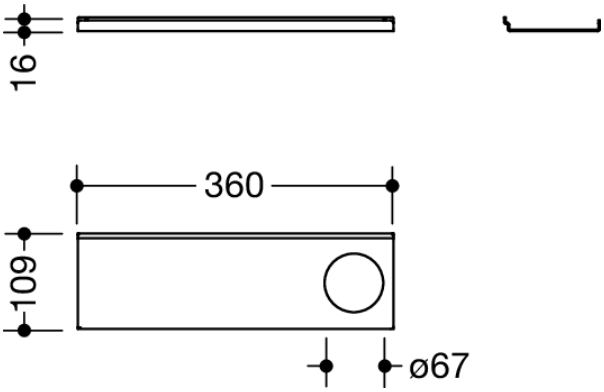

Wymiary w mm

Właściwości

Right shelf hole

- adaptive additional functions for the wall profiles 950.13.00.. and wash basin models 950.13.20.., 950.13.30.., 950.19.087 and 950.19.088
- Shelf can easily be inserted and removed in the profile on the wash basin
- Additional storage space at the wash basin
- Shelf 360 mm wide, 102 mm deep
- Hole serves to accommodate tumblers and soap dispensers of the System 800 K
- Made of high quality stainless steel
- powder-coated in HEWI colours DX (matt white), DC (matt black) and SC (matt dark grey pearl mica)
- Load capacity up to 2 kg

Wyróżnienia

Kolory / Powierzchnie

SC (ciemnoszary matowy)
DX (biały matowy)
DC (czarny matowy)

HEWI Heinrich Wilke GmbH
Sp. z o.o. Oddz. w Polsce
Ul. Puławska 354/356
02-819 Warszawa
Tel.: 22 330 00 51
info@hewi.pl
www.hewi.com