Zestaw klamek ppoż. HEWI
162PBIX11230

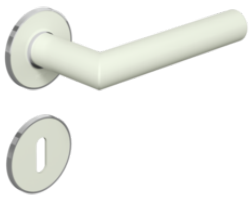

Podobne zdjęcie

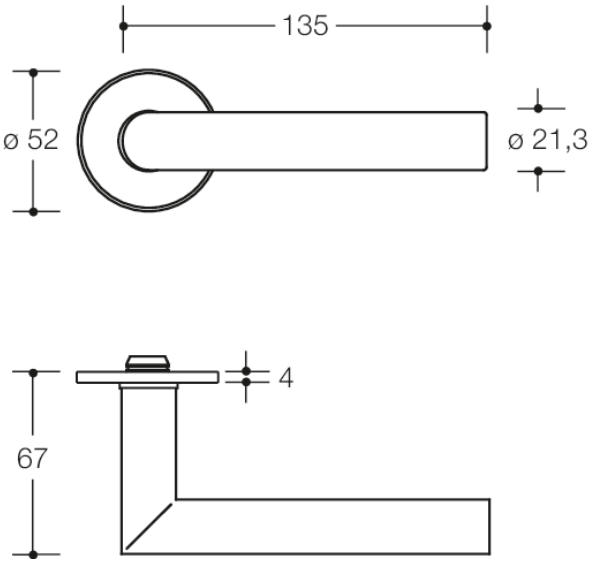

Wymiary w mm

Właściwości
Fire door fitting with escutcheons
Flat roses according to DIN 18255 and EN 1906 and inlay made of coloured, matt polyamide, consisting of:
Lever handle design 162.21PB... in mitre cut made of matt polyamide, with continuous steel core up to the end of the lever handle, through-dyed, 21.3 mm diameter, with stepped shoulder guide and latching groove, with grubscrew M5, for additional fixing of the door lever handle on the square spindle, for optimal transfer of force to door leaf.
Flat lever rose and escutcheon, 305... and 306.23PBXI..., round, diameter 52 mm, 4.0 mm high. Concealed, non-loosening connection: Fixed rotating bearing of the lever handle and the roses, and in the door leaf dipping support pin. Easy and fast assembly, through preassembled assemblies.
Rose material made of stainless steel (1.4301), rose inserts made of matt polyamide
Designed and tested for the projects segment, user category to EN 1906 - Class 4 fire door fitting with spindle 9 mm, according to DIN 18273
user category: Class 4
Durability: Class 7
Door weight: No classification specified
Fire resistance: Class D1
Safety: Class 1
Corrosion resistance: Class 4
Burglary protection: Class 0
Design-type: U

Wyróżnienia

Kolory / Powierzchnie

99 (czysta biel)
92 (szary antracytowy)
90 (czerń jetowa)

HEWI Heinrich Wilke GmbH
Sp. z o.o. Oddz. w Polsce
Ul. Lelka 26
02-812 Warszawa
Tel.: 22 330 00 51
Faks: 22 330 00 50
info@hewi.pl