Similar picture

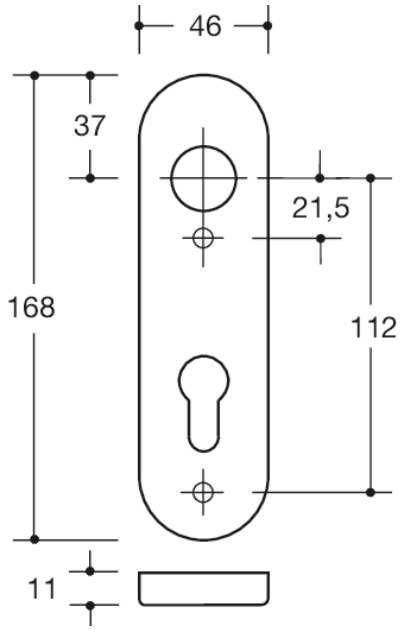

Dimensions in mm

Properties
Short backplate
short cams, in R-technology made of matt polyamide, solid colour, high-gloss surface, and for lever handle neck diameter 20 mm
Composite synthetic material and stainless steel backplate substructure, can be used for left or right-hand opening doors. Concealed, non-loosening screwed joint with M4 screw and sleeve combination as well as lug disappearing into the door leaf.
Backplate cover cap 46 x 168 mm, 10.5 mm high, flat, 1.5 mm wall thickness.
Supplied without screws

Colours / Surfaces

- 99 (pure white)
- 98 (signal white)
- 97 (light grey)
- 95 (stone grey)
- 92 (anthracite grey)
- 90 (jet black)

HEWI Heinrich Wilke GmbH
Postfach 1260
D-34442 Bad Arolsen
Telephon: +49 5691 82-0
Fax: +49 5691 82-319
info@hewi.de
www.hewi.com