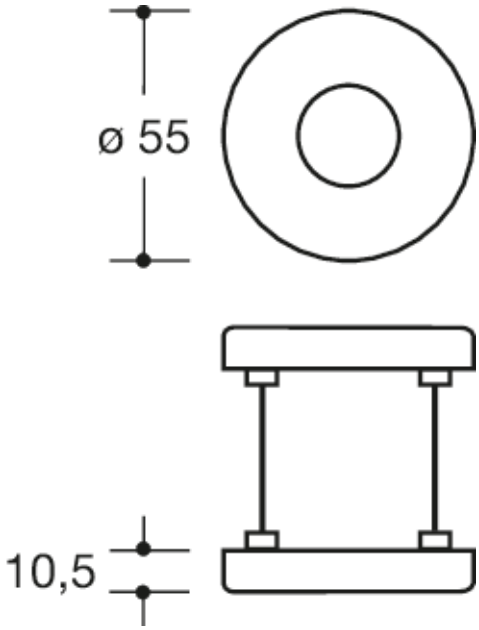

Podobne zdjęcie

Wymiary w mm

Właściwości
Rose
short stems, in R-technology made of solid coloured matt polyamide, for handle diameter 20 mm
Rose substructure made of synthetic material-stainless steel composite, can be used for left and right-hand opening doors. Concealed, non-loosening screwed joint with M4 screw and sleeve combination as well as the pivot disappearing into the door leaf.
Rose cap round, made of solid coloured matt polyamide, diameter 55 mm, 10.5 mm high, flat, 1.5 mm wall thickness.
Supplied without screws

Wyróżnienia

Kolory / Powierzchnie

- 99 (czysta biel)
- 98 (sygnał biały)
- 97 (jasnoszary)
- 95 (szary kamień)
- 92 (szary antracytowy)
- 90 (czerń jetowa)

HEWI Heinrich Wilke GmbH
Sp. z o.o. Oddz. w Polsce
Ul. Lelka 26
02-812 Warszawa
Tel.: 22 330 00 51
Faks: 22 330 00 50
info@hewi.pl