Similar picture

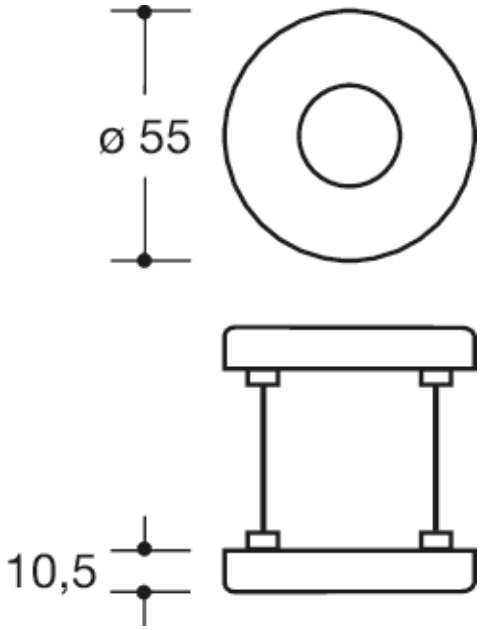

Dimensions in mm

Properties

Rose
long stems, in R-technology made of solid coloured matt polyamide, for handle diameter 20 mm
Rose substructure made of synthetic material-stainless steel composite, can be used for left and right-hand opening doors. Concealed, non-loosening screwed joint with M4 screw and sleeve combination as well as the pivot disappearing into the door leaf.
Rose cap round, made of solid coloured matt polyamide, diameter 55 mm, 10.5 mm high, flat, 1.5 mm wall thickness.
Supplied without screws

Awards

GERMAN DESIGN AWARD WINNER 2019

Colours / Surfaces

- 99 (pure white)
- 98 (signal white)
- 97 (light grey)
- 95 (stone grey)
- 92 (anthracite grey)
- 90 (jet black)

HEWI Heinrich Wilke GmbH
Postfach 1260
D-34442 Bad Arolsen

Telephon: +49 5691 82-0
Fax: +49 5691 82-319

info@hewi.de
www.hewi.com