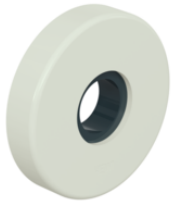

Similar picture

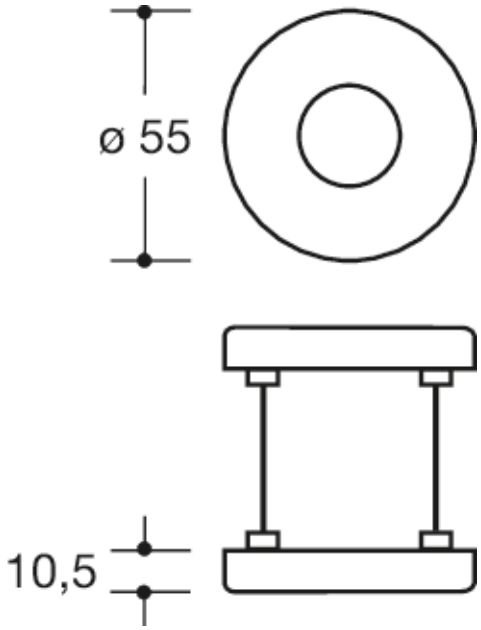

Dimensions in mm

Properties
Lever handle rose
Short cams in R-technology made of polyamide, solid colour, high gloss surface, for lever handle neck diameter 21.3 mm
rose substructure made of synthetic material-stainless steel composite, can be used for left or right-hand opening doors. Concealed, non-loosening screwed joint with M4 screw and sleeve combination as well as lug disappearing into the door leaf.
Rose cover cap, round, diameter 55 mm, 10.5 mm high, flat, 1.5 mm wall thickness.
Supplied without screws

Colours / Surfaces

- 99 (pure white)
- 98 (signal white)
- 92 (anthracite grey)
- 90 (jet black)
- 86 (sand)
- 84 (umber)

HEWI Heinrich Wilke GmbH
Postfach 1260
D-34442 Bad Arolsen
Telephon: +49 5691 82-0
Fax: +49 5691 82-319
info@hewi.de
www.hewi.com