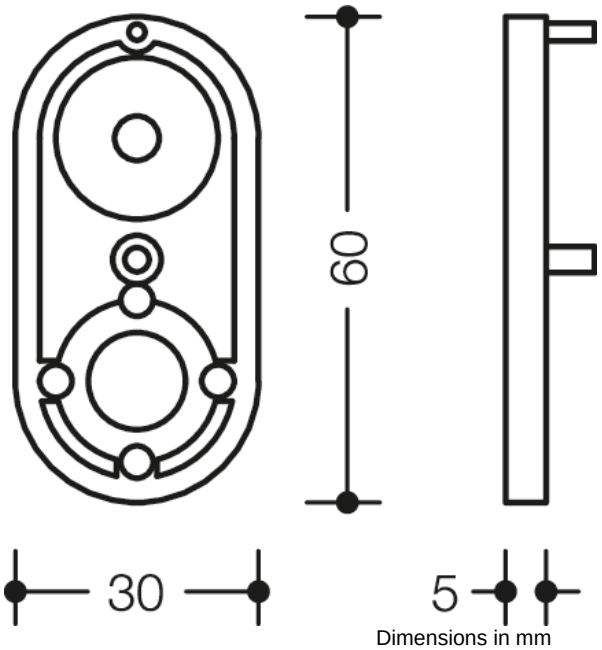

Properties

Shim element

- for mirror clip 477.01.100 and plate glass mirror 801.01.300
- 5 mm thick, to level out uneven tile surfaces
- if necessary, several shim elements can be glued together
- made of high-quality polyamide according to HEWI colour chart

Colours / Surfaces

99 (pure white)	92 (anthracite grey)	74 (apple green)	36 (coral)
98 (signal white)	90 (jet black)	72 (may green)	33 (ruby red)
97 (light grey)	86 (sand)	55 (aqua blue)	24 (orange)
95 (stone grey)	84 (umber)	50 (steel blue)	18 (mustard yellow)

HEWI Heinrich Wilke GmbH
Postfach 1260
D-34442 Bad Arolsen

Telephon: +49 5691 82-0
Fax: +49 5691 82-319

info@hewi.de
www.hewi.com