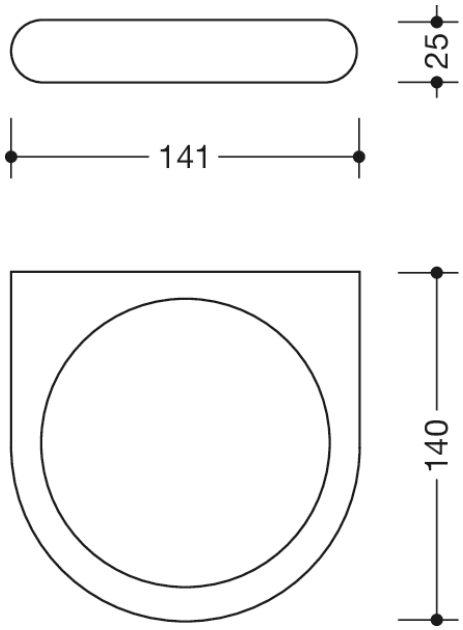

Dimensions in mm

Properties

Range 477 Holder, large

- ring-shaped wall-mounted bracket
- serves as holder for large soap dish and storage basket insert
- 141 mm wide, 25 mm high and 140 mm deep, insert opening 115 mm in diameter
- made of high-quality matt polyamide in HEWI colours 99 (pure white), 98 (signal white), 97 (light grey), 95 (stone grey), 92 (anthracite grey), 55 (aqua blue) and 36 (coral)

Awards

Colours / Surfaces

- 55 (aqua blue)
- 36 (coral)
- 99 (pure white)
- 98 (signal white)
- 97 (light grey)
- 95 (stone grey)
- 92 (anthracite grey)

HEWI Heinrich Wilke GmbH
Postfach 1260
D-34442 Bad Arolsen

Telephon: +49 5691 82-0
Fax: +49 5691 82-319

info@hewi.de
www.hewi.com