Similar picture

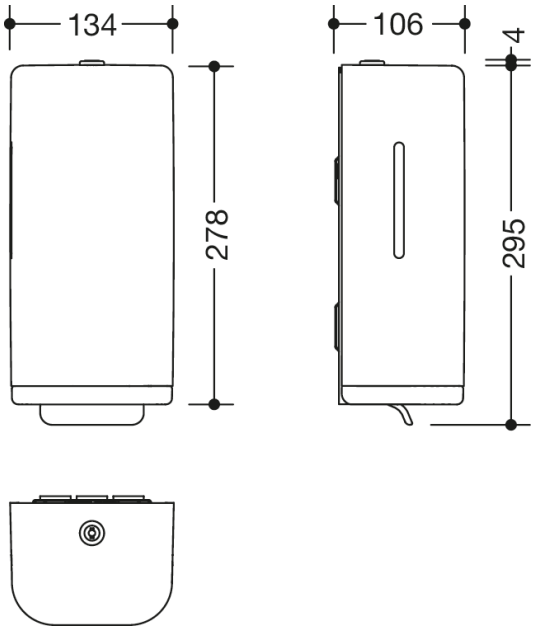

Dimensions in mm

Properties

Range 477 Soap dispenser

- rectangular shaped housing with large radii
- used to hold standard liquid soap
- With inner container for free filling, capacity 600 ml
- inner container can be removed for cleaning
- Side level indicator
- with lever for manual soap dispensing
- With locking device as protection against misuse
- 134 mm wide, 278 mm high and 106 mm deep
- For wall mounting
- Body and lever made of high-gloss polyamide in HEWI colour 99 (pure white)
- Frame element made of high-quality, matt polyamide in HEWI colours 99 (pure white), 98 (signal white), 97 (light grey), 95 (rock grey), 92 (anthracite grey), 74 (apple green), 72 (may green), 55 (aqua blue), 50 (steel blue) and 36 (coral)
- including corrosion-free HEWI fixing material
- Suitable for liquid soap with a viscosity of 1,500 to 4,000 mPa-s

Colours / Surfaces

74 (apple green)	72 (may green)	92 (anthracite grey)
36 (coral)	99 (pure white)	
50 (steel blue)	97 (light grey)	
55 (aqua blue)	95 (stone grey)	

HEWI Heinrich Wilke GmbH
Postfach 1260
D-34442 Bad Arolsen

Telephon: +49 5691 82-0
Fax: +49 5691 82-319

info@hewi.de
www.hewi.com