Similar picture

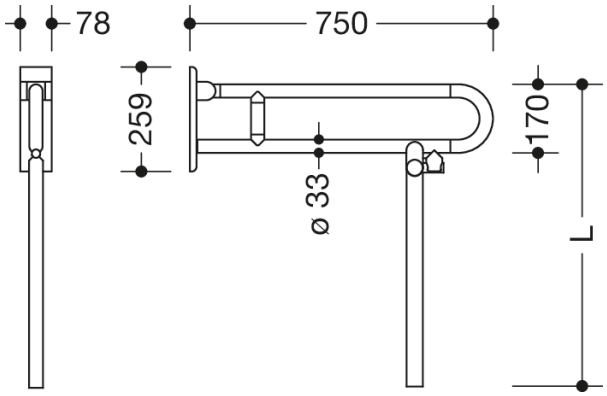

Dimensions in mm

Properties

Range 801 Hinged support rail (rotatable)

- with floor support made to measure
- two parallel rails running one above the other joined by a connecting bend
- for holding on to and providing support
- weight capacity 100 kg
- with continuous, corrosion resistant steel core and wall plate made of polyamide with integrated steel core
- can be folded upwards and, folded downwards with braking mechanism, in raised position can be turned to left or right towards the wall
- for wall mounting with wall-specific HEWI fixing material (must be ordered separately)
- sealing tape for sealing the fixing points is included in the scope of supply
- concealed fixing
- 750 mm projection, 259 mm high and 78 mm wide, 33 mm rail diameter
- made of high-quality matt polyamide in HEWI colours 99 (pure white), 98 (signal white), 97 (light grey), 95 (stone grey) and 92 (anthracite grey)
- toilet roll holder 801.50B011 and WC flushing mechanism (radio-controlled) 801.50B060 for retrofitting
- produced in accordance with CE- and UKCA-Regulation (EU) 2017/745 on medical devices
- fulfils the requirements applicable in Belgium (CWATUPE, WVG Vlaanderen) in respect of the projection of the hinged support rail on the toilet

Awards

BEST OF DECADE
universal design company

Certificates

HEWI Heinrich Wilke GmbH
Postfach 1260
D-34442 Bad Arolsen

Telephon: +49 5691 82-0
Fax: +49 5691 82-319

info@hewi.de
www.hewi.com

Colours / Surfaces

- 99 (pure white)
- 98 (signal white)
- 97 (light grey)
- 95 (stone grey)
- 92 (anthracite grey)

HEWI Heinrich Wilke GmbH
Postfach 1260
D-34442 Bad Arolsen

Telephon: +49 5691 82-0
Fax: +49 5691 82-319

info@hewi.de
www.hewi.com