Similar picture

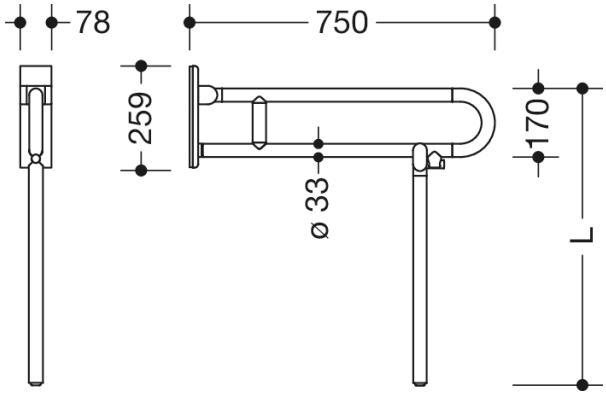

Dimensions in mm

Properties

Range 801 mobile hinged support rail

- with floor support made to measure
- two parallel rails running one above the other joined by a connecting bend
- for holding on to and providing support
- weight capacity 100 kg
- with continuous, corrosion resistant steel core
- can be folded upwards and, folded downwards with braking mechanism
- for mobile use
- for easy and flexible retrofitting on existing, preassembled mounting plate 950.50.016, must be ordered separately
- toolless and quick installation by simple attachment of the mobile hinged support rail
- secured by fixing screw to prevent unintentional removal
- 750 mm projection, 252 mm high and 78 mm wide, 33 mm rail diameter
- made of high-quality matt polyamide in HEWI colours 99 (pure white), 98 (signal white), 97 (light grey), 95 (stone grey) and 92 (anthracite grey)
- toilet roll holder 801.50B011 and WC flushing mechanism (radio-controlled) 801.50B060 for retrofitting
- produced in accordance with CE- and UKCA-Regulation (EU) 2017/745 on medical devices
- fulfils the requirements applicable in Belgium (CWATUPE, WVG Vlaanderen) in respect of the projection of the hinged support rail on the toilet

Awards

BEST OF DECADE
universal design company

Certificates

Colours / Surfaces

- 99 (pure white)
- 98 (signal white)
- 97 (light grey)
- 95 (stone grey)
- 92 (anthracite grey)

HEWI Heinrich Wilke GmbH
Postfach 1260
D-34442 Bad Arolsen

Telephon: +49 5691 82-0
Fax: +49 5691 82-319

info@hewi.de
www.hewi.com