Similar picture

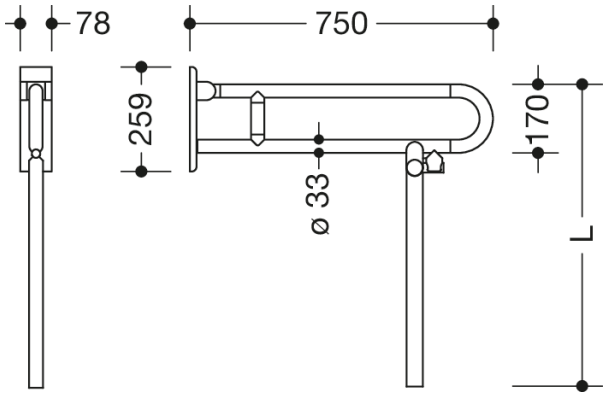

Dimensions in mm

Properties

Range 801 Hinged support rail

- with floor support made to measure
- two parallel rails running one above the other joined by a connecting bend
- for holding on to and providing support
- weight capacity 100 kg
- with continuous, corrosion resistant steel core and wall plate made of polyamide with integrated steel core
- can be folded upwards and, folded downwards with braking mechanism
- for wall mounting with wall-specific HEWI fixing material (must be ordered separately)
- sealing tape for sealing the fixing points is included in the scope of supply
- concealed fixing
- 750 mm projection, 259 mm high and 78 mm wide, 33 mm rail diameter
- made of high-quality polyamide by HEWI colour table
- toilet roll holder 801.50.011 and WC flushing mechanism (radio-controlled) 801.50.060 for retrofitting
- produced in accordance with CE- and UKCA-Regulation (EU) 2017/745 on medical devices
- fulfils the requirements applicable in Belgium (CWATUPE, WVG Vlaanderen) in respect of the projection of the hinged support rail on the toilet

Awards

BEST OF DECADE
universal design company

Certificates

Colours / Surfaces

99 (pure white)	92 (anthracite grey)	74 (apple green)	33 (ruby red)
98 (signal white)	90 (jet black)	55 (aqua blue)	18 (mustard yellow)
97 (light grey)	86 (sand)	50 (steel blue)	
95 (stone grey)	84 (umber)	36 (coral)	

HEWI Heinrich Wilke GmbH
Postfach 1260
D-34442 Bad Arolsen

Telephon: +49 5691 82-0
Fax: +49 5691 82-319

info@hewi.de
www.hewi.com