Krzesełko składane HEWI
801.51B200

Podobne zdjęcie

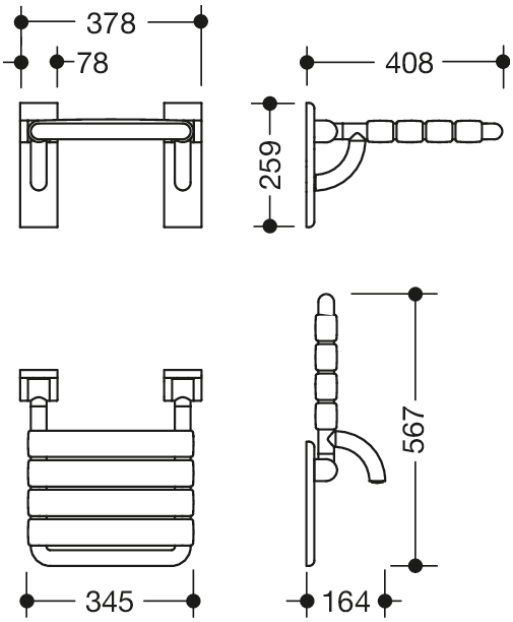

Wymiary w mm

Właściwości

Range 801 Hinged seat

- made of rails and seat slats
- with continuous, corrosion resistant steel core
- can be folded up
- adjustable seat tilt
- used for safe sitting in the shower area
- maximum weight capacity 150 kg
- wall mounting plate made of polyamide with integrated steel core
- mounting on the wall with HEWI wall-specific fixing material made of stainless steel
- 378 mm wide, 408 mm deep
- seat slats 55 mm wide
- made of high-quality matt polyamide in HEWI colours 99 (pure white), 98 (signal white), 97 (light grey), 95 (stone grey) and 92 (anthracite grey)

Wyróżnienia

Kolory / Powierzchnie

- 99 (czysta biel)
- 98 (sygnał biały)
- 97 (jasnoszary)
- 95 (szary kamień)
- 92 (szary antracytowy)

HEWI Heinrich Wilke GmbH
Sp. z o.o. Oddz. w Polsce
Ul. Lelka 26
02-812 Warszawa
Tel.: 22 330 00 51
Faks: 22 330 00 50
info@hewi.pl