Similar picture

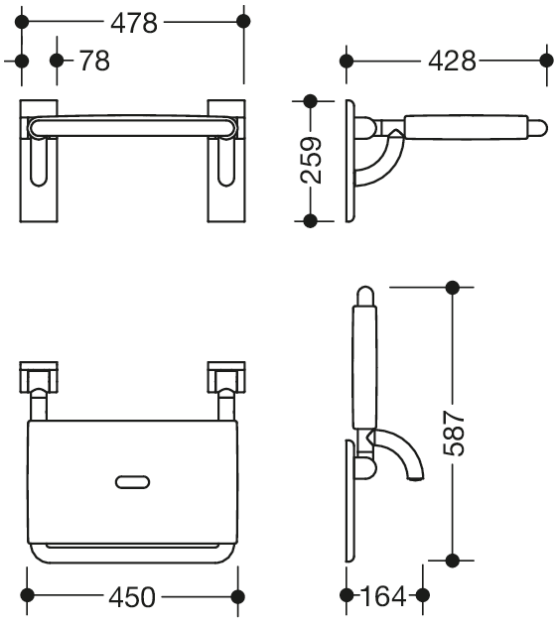

Dimensions in mm

Properties

Series 801 fold-away seat

- construction consists of rails and seat
- for safe sitting in the shower area
- maximum load capacity 150 kg
- with space-saving fold-away seat
- mounted on the wall with wall-specific HEWI fixing material
- sealing tape and sealing discs for sealing the fixing points according to DIN 18534 are included in the scope of delivery
- concealed fixing
- 478 mm wide, 428 mm deep
- seat surface 450 mm wide
- made of high gloss polyamide in all HEWI colours
- with corrosion resistant steel core
- wall plates made of polyamide with integrated steel core

Colours / Surfaces

18 (mustard yellow)	55 (aqua blue)	90 (jet black)	98 (signal white)
33 (ruby red)	99 (pure white)	92 (anthracite grey)	74 (apple green)
36 (coral)	84 (umber)	95 (stone grey)	
50 (steel blue)	86 (sand)	97 (light grey)	

HEWI Heinrich Wilke GmbH
Postfach 1260
D-34442 Bad Arolsen

Telephon: +49 5691 82-0
Fax: +49 5691 82-319

info@hewi.de
www.hewi.com