Similar picture

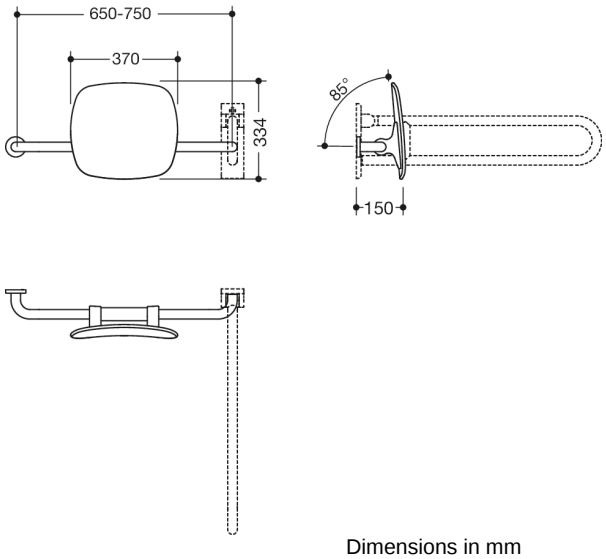

Dimensions in mm

Properties

Back support, Series 801

- back rest with right-angled rods and fixing rosettes attached on both sides
- serves to support the back on the WC
- left-hand version
- one-sided installation on the wall with rosettes (right)
- one-sided installation on folding support handles or wall support handles with wall plate (left)
- adjustable on site
- 650 to 750 mm wide, 150 mm deep, back rest 334 mm high and 370 mm wide, rod diameter 33 mm, rosette diameter 70 mm
- with continuous, corrosion-protected steel core
- back rest made of synthetic material in HEWI colour 98 (signal white)
- connection made of high-gloss polyamide according to HEWI colour chart
- meets the requirements according to DIN 18040 and ÖNORM B1600/1601

Colours / Surfaces

33 (ruby red)	74 (apple green)	92 (anthracite grey)	99 (pure white)
36 (coral)	18 (mustard yellow)	95 (stone grey)	84 (umber)
50 (steel blue)	86 (sand)	97 (light grey)	
55 (aqua blue)	90 (jet black)	98 (signal white)	

HEWI Heinrich Wilke GmbH
Postfach 1260
D-34442 Bad Arolsen

Telephon: +49 5691 82-0
Fax: +49 5691 82-319

info@hewi.de
www.hewi.com