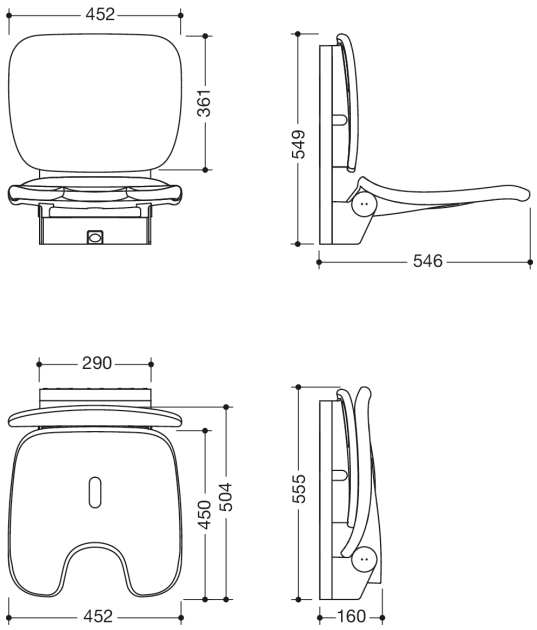

Dimensions in mm

## Properties

Range 802 LifeSystem hinged seat Comfort with pubic cutout

- ergonomically shaped seat with backrest
- used for safe sitting in the shower area
- high-quality plastic surface and scratch-resistant powder coating
- seat weight capacity up to 150 kg
- seat can be folded up to save space
- maintenance free, permanently smooth and easy moving joint
- 452 mm wide, 549 mm high, 546 mm deep
- when folded up 555 mm high and 160 mm deep
- seat 452 mm wide, 450 mm deep
- Seat with pubic cutout and water drainage
- seat height adjustable to four levels from 420 mm to 510 mm (every 30 mm)
- Console made of stainless steel, powder-coated in the HEWI colours signal white, glossy with seat/back surface made of high-quality PUR/integral hard foam in SD (signal white, matt) or console in anthracite, glossy with seat/back surface in DR (anthracite, matt) with high-gloss chrome-plated design elements
- for mounting with non-corrosive and tested HEWI fixing materials for different wall systems (to be ordered separately)
- sealing tape and sealing discs for sealing the fixing points according to DIN 18534 are included in the scope of delivery
- produced in accordance with CE- and UKCA-Regulation (EU) 2017/745 on medical devices
- fulfils the DIN 18040, ÖNORM B1600/1601 and SIA 500 requirements

## Colours / Surfaces

SD (white polish
-white matt)

DR (anthracite high gloss
-anthracite matt)



HEWI Heinrich Wilke GmbH
Postfach 1260
D-34442 Bad Arolsen

Telephon: +49 5691 82-0
Fax: +49 5691 82-319

info@hewi.de
www.hewi.com