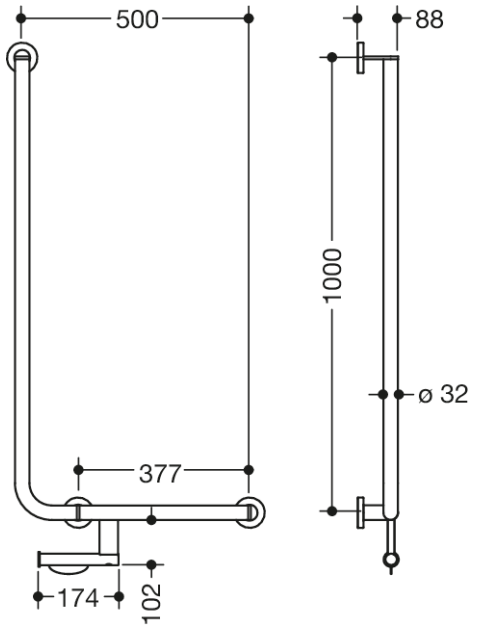


Dimensions in mm

## Properties

L-shaped support rail with toilet roll holder, System 900

- vertical and horizontal rails, joined at right-angles with mounting roses
- right-hand version
- horizontal length 500 mm, vertical length 1000 mm, 88 mm deep
- rail diameter 32 mm, tube thickness 2 mm, rose diameter 70 mm
- made of high-quality stainless steel, satin
- including non-corrosive and tested HEWI fixing material for wall mounting and sealing tape for sealing the drilling points
- fulfils the SIA 500 requirements

## Awards



HEWI Heinrich Wilke GmbH
Postfach 1260
D-34442 Bad Arolsen

Telephon: +49 5691 82-0
Fax: +49 5691 82-319

info@hewi.de
www.hewi.com