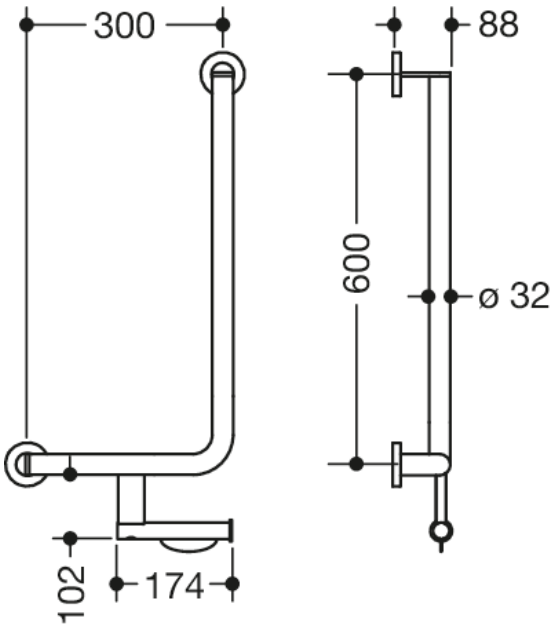

Podobne zdjęcie

Wymiary w mm

Właściwości

L-shaped support rail with toilet roll holder, System 900

- vertical and horizontal rails, joined at right-angles with fixing roses
- with toilet roll holder
- left-hand version
- horizontal length 300 mm, vertical length 600 mm, 88 mm deep
- rail diameter 32 mm, tube thickness 2 mm, rose diameter 70 mm
- made of high-quality stainless steel, satin
- including non-corrosive and tested HEWI fixing material for wall mounting and sealing tape for sealing the drilling points

Wyróżnienia

HEWI Heinrich Wilke GmbH
Sp. z o.o. Oddz. w Polsce
Ul. Lelka 26

02-812 Warszawa
Tel.: 22 330 00 51

Faks: 22 330 00 50
info@hewi.pl