Similar picture

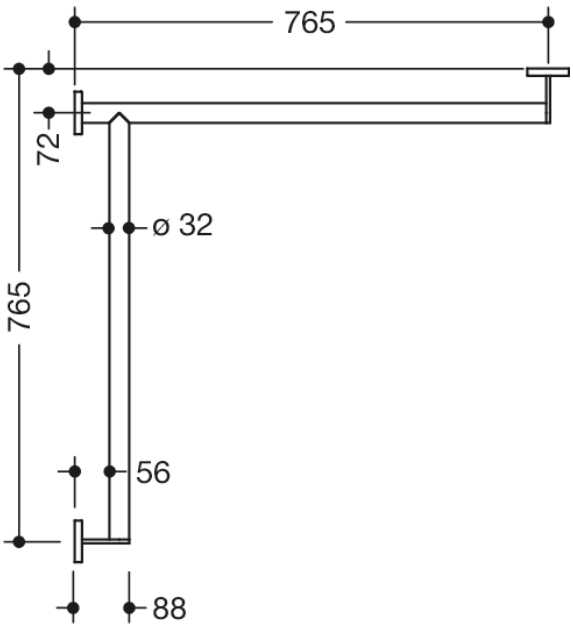

Dimensions in mm

Properties

Shower handrail, System 900

- horizontally arranged rails connected at right-angles, with mounting roses
- left-hand version
- horizontal lengths 765 mm, 88 mm deep
- rail diameter 32 mm, tube thickness 2 mm, rose diameter 70 mm
- made of high-quality stainless steel, chrome
- reduced number of mounting roses due to innovative corner connection
- including non-corrosive and tested HEWI fixing material for wall mounting and sealing tape for sealing the drilling points
- Please note when using with hanging seats: Compatibility check required.
- A detailed list of possible combinations of hand rails, L-shaped rails and shower handrails with matching hanging seats can be found in our online catalogue in the download area of the respective product.

Awards

HEWI Heinrich Wilke GmbH
Postfach 1260
D-34442 Bad Arolsen

Telephon: +49 5691 82-0
Fax: +49 5691 82-319

info@hewi.de
www.hewi.com