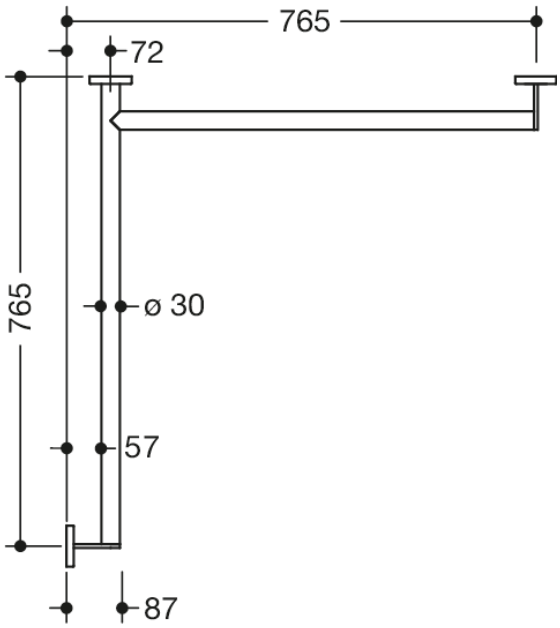

Dimensions in mm

Properties

Shower handrail, System 900

- horizontally arranged rails connected at right-angles, with mounting roses
- right-hand version
- horizontal lengths 765 mm, 87 mm deep
- rail diameter 30 mm, tube thickness 2 mm, rose diameter 70 mm
- made of high-quality stainless steel, powder-coated in HEWI colours DX (matt white), DC (matt black) and SC (matt dark grey pearl mica)
- reduced number of mounting roses due to innovative corner connection
- including non-corrosive and tested HEWI fixing material for wall mounting and sealing tape for sealing the drilling points
- Please note when using with hanging seats: Compatibility check required.
- A detailed list of possible combinations of hand rails, L-shaped rails and shower handrails with matching hanging seats can be found in our online catalogue in the download area of the respective product.

Awards

Colours / Surfaces

SC (matt dark grey pearl mica)
DX (matt white)
DC (matt black)

HEWI Heinrich Wilke GmbH
Postfach 1260
D-34442 Bad Arolsen

Telephon: +49 5691 82-0
Fax: +49 5691 82-319

info@hewi.de
www.hewi.com