HEWI Shower grab rail with sideways adjustable vertical support bar and shower head holder
900.35.40260

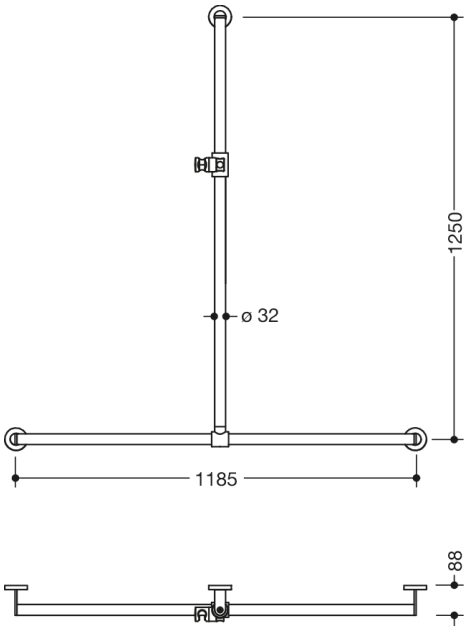

Dimensions in mm

Properties

Shower handrail with sliding shower head rail, System 900

- vertical and horizontally arranged rails connected at right angles with mounting roses and shower head holder
- with shower head rail that can be pushed to the side (for installation)
- vertical length 1250 mm, horizontal lengths 1185 mm, 88 mm deep
- rail diameter 32 mm, tube thickness 2 mm, rose diameter 70 mm
- made of high-quality stainless steel, powder-coated in the HEWI colour CV (matt black) and ER (matt dark grey pearl mica) with a showerhead holder in matt black polyamide or powder-coated in the HEWI colour AS (matt white) with a showerhead holder in matt white polyamide
- suitable for shower heads of various manufacturers
- shower head holder can be tilted continuously and, after pressing a large pushbutton, its height can be adjusted
- conical adapter on shower head holder makes it easier to hook in the shower head
- including non-corrosive and tested HEWI fixing material for wall mounting and sealing tape for sealing the drilling points
- Please note when using with hanging seats: Compatibility check required.
- A detailed list of possible combinations of hand rails, L-shaped rails and shower handrails with matching hanging seats can be found in our online catalogue in the download area of the respective product.

Awards

Colours / Surfaces

ER (dk grey
-black matt)

CV (black deep matt
-black matt (90))

AS (matt white
- matt white)

HEWI Heinrich Wilke GmbH
Postfach 1260
D-34442 Bad Arolsen

Telephon: +49 5691 82-0
Fax: +49 5691 82-319

info@hewi.de
www.hewi.com