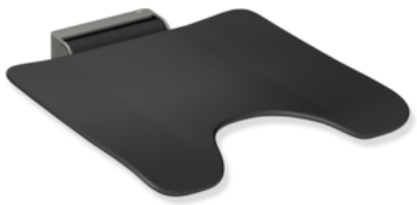

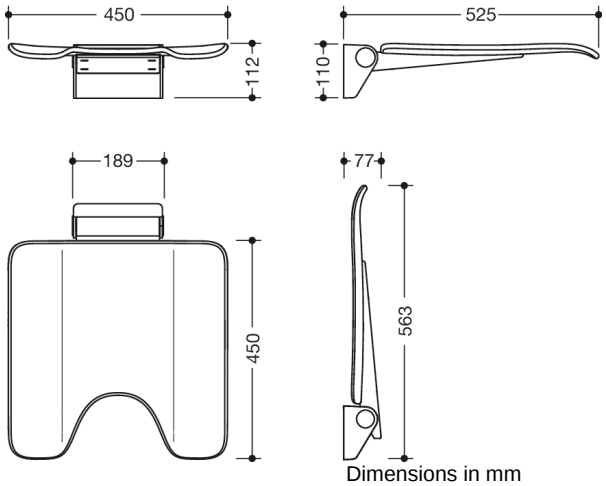

Properties

Hinged seat, System 900

- construction consisting of wall bracket and continuous seat
- slip-resistant, textured seat made of synthetic material in HEWI colours 98 (signal white) and 90 (jet black)
- reinforcement of the seat made of aluminium, powder coated in the colour of the seat
- wall bracket made of high-quality stainless steel, powder-coated in the HEWI colour CV (matt black) and ER (matt dark grey pearl mica) with a black seat or powder-coated in the HEWI colour AS (matt white) with a white seat
- seat with hygiene cutout can be folded up to save space
- seat depth when folded up 77 mm
- weight capacity up to 150 kg
- 450 mm wide, 525 mm deep and 112 mm high
- seat 450 mm wide and 450 mm deep
- for mounting with non-corrosive and tested HEWI fixing materials for different wall systems (to be ordered separately)
- sealing tape and sealing discs for sealing the fixing points according to DIN 18534 are included in the scope of delivery
- fulfils the DIN 18040, ÖNORM B1600/1601 and SIA 500 requirements

Awards

Colours / Surfaces

ER (dk grey
-black matt)

CV (black deep matt
-black matt (90))

AS (matt white
- matt white)

HEWI Heinrich Wilke GmbH
Postfach 1260
D-34442 Bad Arolsen

Telephon: +49 5691 82-0
Fax: +49 5691 82-319

info@hewi.de
www.hewi.com