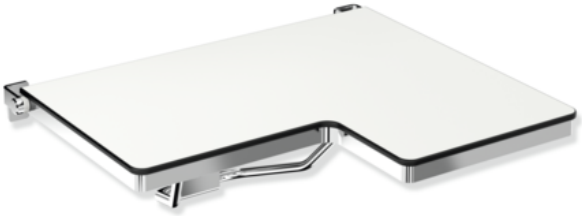

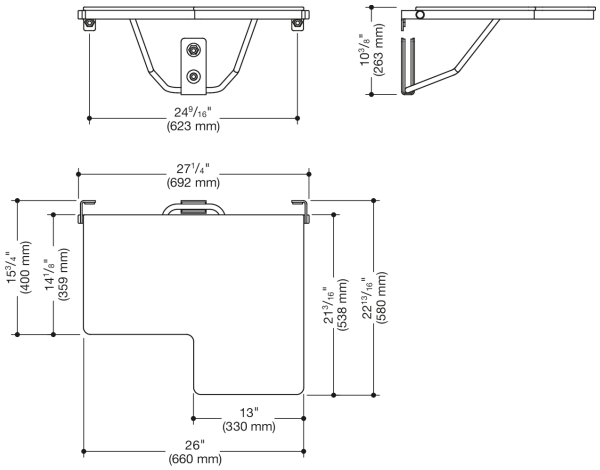

Wymiary w mm

Właściwości

Shower folding seat, L-shape (USA)

- made of high-quality polished stainless steel with one-piece HPL seat, screwed from the underside
- functions as a secure seat in the shower area
- can be folded up
- wall bracket made of stainless steel
- projecting seat element left
- projecting seat element: 13 inch (330 mm) wide and 22 13/16 inch (580 mm) deep
- narrow seat element: 13 inch (330 mm) wide and 15 3/4 inch (400 mm) deep
- low-maintenance brakes on shower seat allow seat surface to remain in an upright position after folding up
- surfaces enable easy cleaning and hygiene
- additional wall support with high-quality polished stainless steel bracket with high-quality polished stainless steel wall bracket
- includes fixing material for mounting to cavity walls with wood backlining of two 2 inch x 12 inch laminate or hardwood boards connected with a 1/2 inch x 12 inch plywood board
- maximum loading capacity 450 lbs (204 kg)
- meets requirements according to 2010 ADA standards and ICC / ANSI A117.1-2017
- shipping only possible on pallet

Wyróżnienia

Certyfikaty

ADA compliant

HEWI Heinrich Wilke GmbH
Sp. z o.o. Oddz. w Polsce
Ul. Lelka 26
02-812 Warszawa
Tel.: 22 330 00 51
Faks: 22 330 00 50
info@hewi.pl