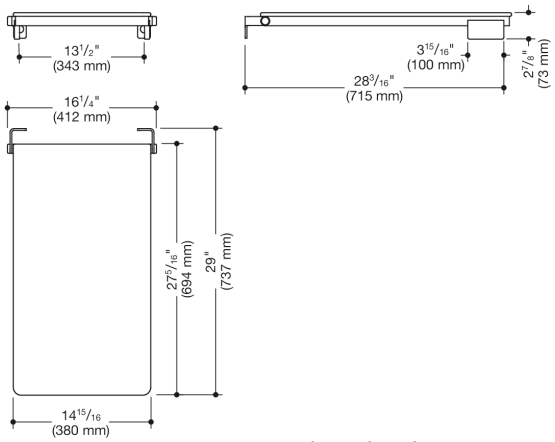

Dimensions in mm

Properties

Bathtub seat with lift-up feature (USA)

- made of high-quality polished stainless steel with one-piece HPL seat, screwed from the underside
- functions as a secure seat in the bathtub
- can be folded up
- wall bracket made of stainless steel
- low-maintenance brakes on shower seat allow seat surface to remain in an upright position after folding up
- surfaces enable easy cleaning and hygiene
- 14 15/16 inch (380 mm) wide and 29 inch (737 mm) deep
- includes fixing material for mounting to cavity walls with wood backlining of two 2 inch x 12 inch laminate or hardwood boards connected with a 1/2 inch x 12 inch plywood board
- maximum loading capacity 450 lbs (204 kg)
- meets requirements according to 2010 ADA standards and ICC / ANSI A117.1-2017
- shipping only possible on pallet

Awards

Certificates

ADA compliant

HEWI Heinrich Wilke GmbH
Postfach 1260
D-34442 Bad Arolsen

Telephon: +49 5691 82-0
Fax: +49 5691 82-319

info@hewi.de
www.hewi.com