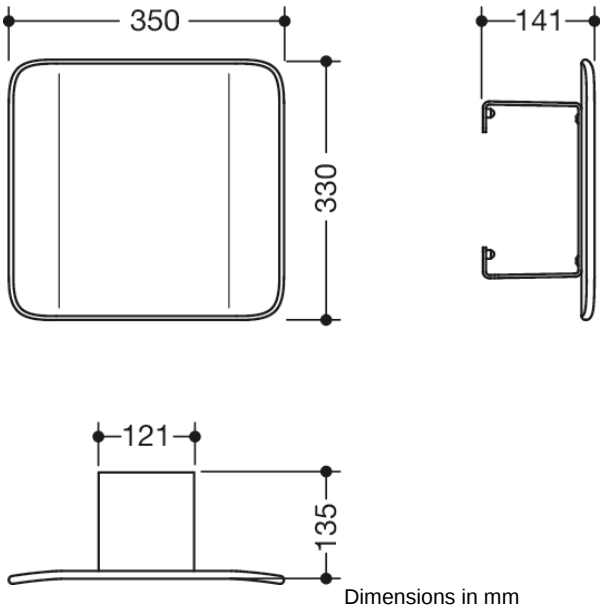

Dimensions in mm

Properties

Backrest, System 900

- backrest with rear mounting brackets
- serves as back support for toilet users
- for wall mounting
- 330 mm high and 141 mm deep, 350 mm wide
- connection made of high-quality stainless steel, powder-coated in the HEWI colours AS (matt white), CV (matt black) and AF (anthracite grey matt)
- backrest made of synthetic material in colour of the connection
- including non-corrosive and tested HEWI fixing material

Awards

Colours / Surfaces

CV (black deep matt
-black matt (90))

AS (matt white
- matt white)

AF (anthracite grey matt
- anthracite grey matt)

HEWI Heinrich Wilke GmbH
Postfach 1260
D-34442 Bad Arolsen

Telephon: +49 5691 82-0
Fax: +49 5691 82-319

info@hewi.de
www.hewi.com