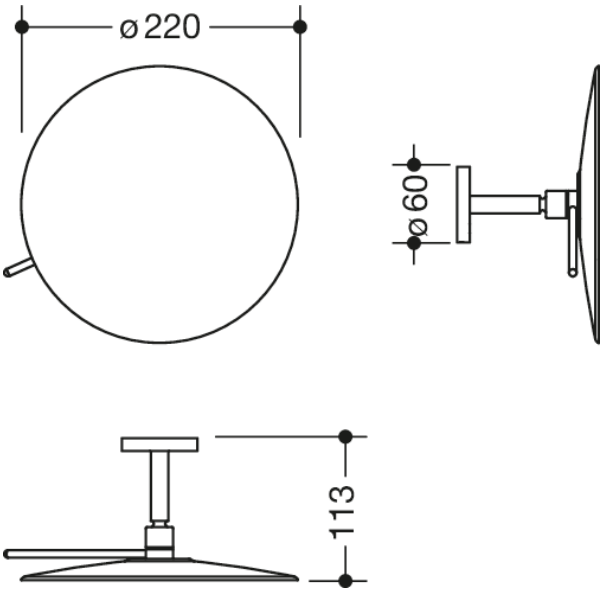

Dimensions in mm

Properties

Cosmetic mirror

- round unlit mirror
- framed in a chrome-plated metal frame
- magnification factor x 3
- mirror and mirror surface diameter 220 mm
- on straight arm, movable, length 55 mm
- total depth 113 mm
- for wall mounting, concealed 3-point fixing
- wall connection diameter 60 mm, 10 mm deep
- including corrosion-free HEWI fixing material
- high-quality chrome-plated

HEWI Heinrich Wilke GmbH
Postfach 1260
D-34442 Bad Arolsen

Telephon: +49 5691 82-0
Fax: +49 5691 82-319

info@hewi.de
www.hewi.com