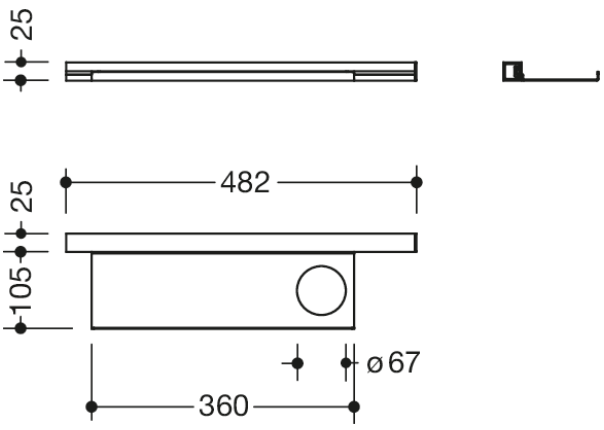

Dimensions in mm

Properties

Pedestal wash basin profiles with shelf

- adaptive additional functions for the wash basin models 950.13.20.. and 950.13.30..
- Shelf can easily be inserted and removed in the profile on the wash basin
- Additional storage space at the wash basin
- Shelf 360 mm wide, 102 mm deep
- Hole serves to accommodate tumblers and soap dispensers of the System 800 K
- shelf made of high-quality stainless steel, aluminium profile
- powder-coated in HEWI colours DX (matt white), DC (matt black) and SC (matt dark grey pearl mica)
- Load capacity up to 2 kg
- Including corrosion-free HEWI fastening material for the profile

Awards

GERMAN DESIGN AWARD WINNER 2020

Colours / Surfaces

SC (matt dark grey pearl mica)
DX (matt white)
DC (matt black)

HEWI Heinrich Wilke GmbH
Postfach 1260
D-34442 Bad Arolsen
Telephon: +49 5691 82-0
Fax: +49 5691 82-319
info@hewi.de
www.hewi.com