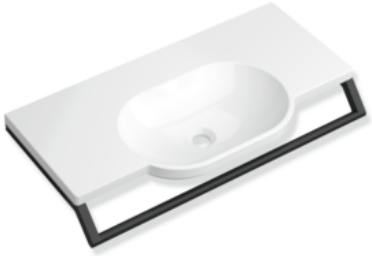

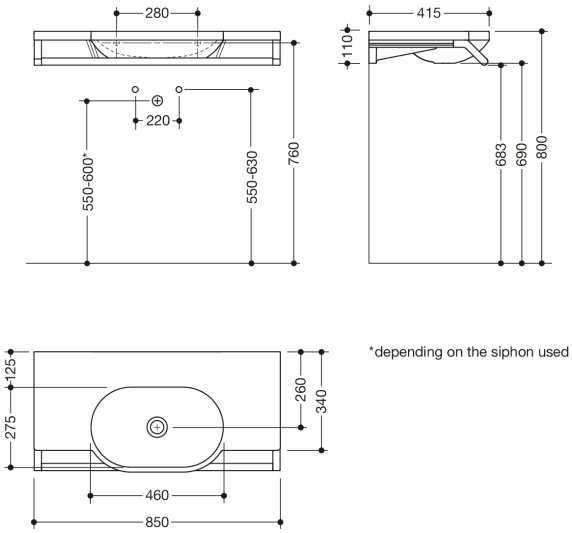

Dimensions in mm

Properties

Set washbasin with grab rail consisting of
Washbasin 950.11.220

- Made of mineral composite with non-porous surface, alpine white
- with shelf and oval basin
- without overflow
- for wall-mounted fittings
- wheelchair accessible
- Weight capacity to EN 14688
- 850 mm wide and 415 mm deep
- wash bowl recess 90 mm
- For hanger bolt fastening
- CE marking according to Construction Products Regulation No. 305/2011
- fulfils the ÖNORM B1600/1601 requirements for small basins

and modular accessories
Washbasin profiles with grab rail 950.13.0025

- Grab rail, can also be used as a towel rail
- 850 mm wide, diameter holding bar 25 mm
- Holding bar made of high-quality stainless steel
- Powder-coated in the HEWI colours DX (white deep matt), DC (black deep matt) and SC (dark grey pearl mica deep matt)
- Weight capacity up to 80 kg
- is mounted over the two profiles under the washbasin
- incl. non-corrosive HEWI fixing materials

Colours / Surfaces

DX (matt white)
DC (matt black)
SC (matt dark grey pearl mica)

HEWI Heinrich Wilke GmbH
Postfach 1260
D-34442 Bad Arolsen
Telephon: +49 5691 82-0
Fax: +49 5691 82-319
info@hewi.de
www.hewi.com