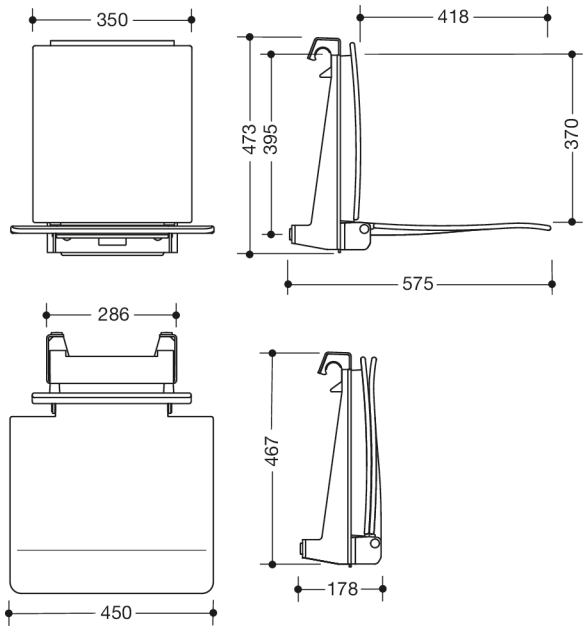

Dimensions in mm

Properties

Removable hanging seat

- ergonomically shaped seat with backrest
- used for safe sitting in the shower area
- 450 mm wide, 575 mm deep and 467 mm high
- hanging device made of metal, anthracite grey powder-coated
- seat and backrest made of glass fibre reinforced, anthracite grey polyamide
- ergonomically curved seat shape for a highly comfortable sitting
- large radii at the outside edges of the seat
- slip-resistant, textured seat surface
- seat can be folded up to save space
- no struts and fixings visible in folded up state
- carry handle can be lowered when not in use and at the same time acts as a stabiliser
- for hanging in HEWI shower grab rails and support rails diameter 33 mm
- maximum weight capacity 150 kg
- A detailed list of possible combinations of hand rails, L-shaped rails and shower handrails with matching hanging seats can be found in our online catalogue in the download area of the respective product.

Awards

Colours / Surfaces

92 (anthracite grey)

HEWI Heinrich Wilke GmbH
Postfach 1260
D-34442 Bad Arolsen

Telephon: +49 5691 82-0
Fax: +49 5691 82-319

info@hewi.de
www.hewi.com