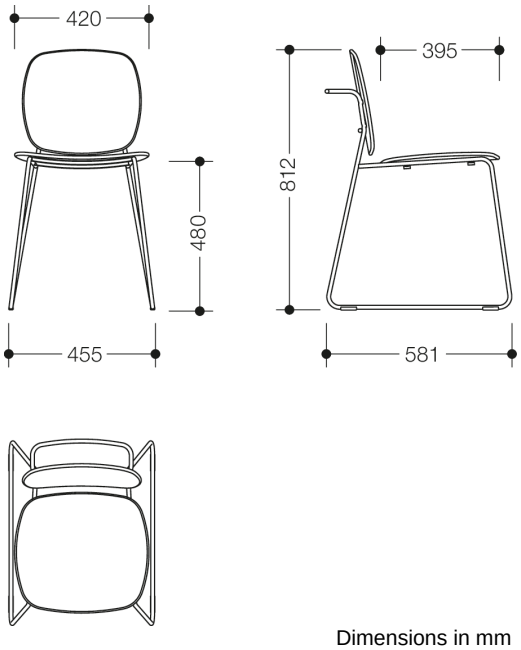

Dimensions in mm

Properties

Bath chair

- more mobile, Universal chair with towel rail
- suitable for the showers
- sophisticated round tube design combined with an ergonomic two-part seat
- pleasantly warm seat and backrest made of high-quality plastic, lightly textured
- Weight: 7.6 kg
- 812 mm tall, 455 mm wide
- seat 420 mm wide
- Seat height: 480 mm
- Powder-coated frame in HEWI colour CV (deep matt black) with matt black seat surface
- equipped with anti-slip rubber feet
- tested up to 200 kg
- Recommended maximum weight of the user: 150 kg

Awards

Colours / Surfaces

CV (black deep matt
-black matt (90))

HEWI Heinrich Wilke GmbH
Postfach 1260
D-34442 Bad Arolsen

Telephon: +49 5691 82-0
Fax: +49 5691 82-319

info@hewi.de
www.hewi.com