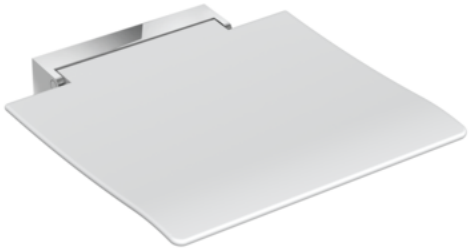

Similar picture

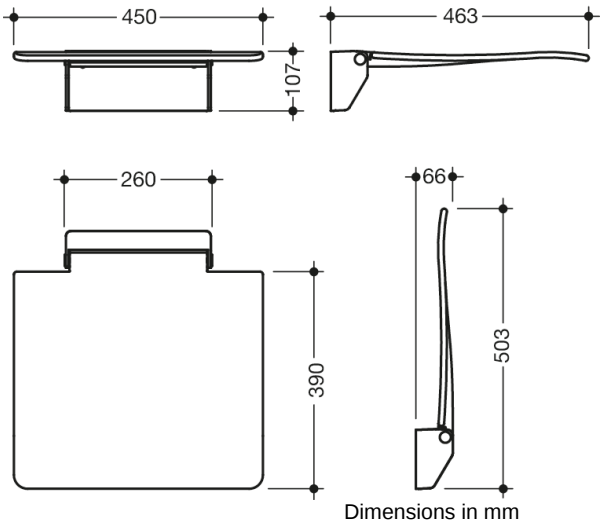

Dimensions in mm

Properties

Mobile Hinged seat 450

- construction consisting of wall bracket and continuous seat
- used for safe sitting in the shower area
- for mobile use
- for easy and flexible retrofitting on existing, preassembled mounting plate: 950.51.014.., must be ordered separately
- tool-free and quick installation by means of simple hanging of the seat
- secured against unintentional removal with knurled screw
- 450 mm wide, 463 mm deep and 107 mm high
- Wall bracket made of high-quality stainless steel, chrome-plated
- seat made of glass fibre reinforced polyamide, in the colours white and anthracite grey
- ergonomically curved seat shape for a highly comfortable sitting
- large radii at the outside edges of the seat
- slip-resistant, textured seat surface
- seat can be folded up
- seat depth when folded up: 66 mm
- no struts visible in folded up state
- maximum weight capacity 150 kg
- sealing tape and sealing discs for sealing the fixing points according to DIN 18534 are enclosed with the mounting plate
- fulfils the DIN 18040, ÖNORM B1600/1601 and SIA 500 requirements

Colours / Surfaces

98 (signal white)
92 (anthracite grey)

HEWI Heinrich Wilke GmbH
Postfach 1260
D-34442 Bad Arolsen
Telephon: +49 5691 82-0
Fax: +49 5691 82-319
info@hewi.de
www.hewi.com