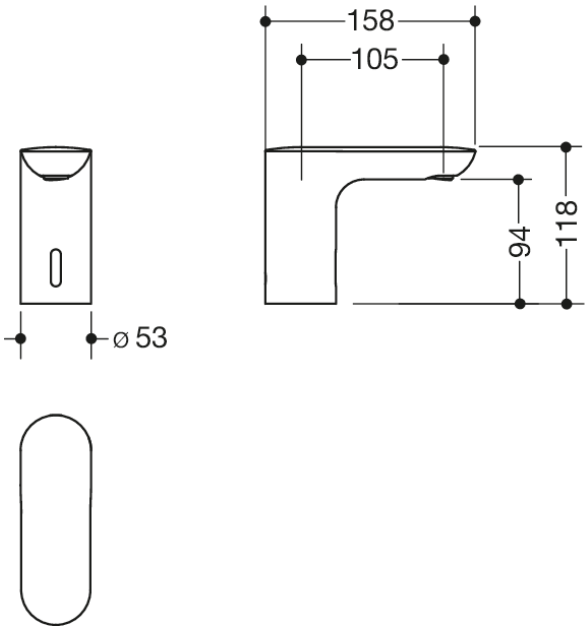

Dimensions in mm

Properties

Electronic washbasin fitting

- high-quality chrome-plated, round
- Flow rate 5 l/min
- Battery operation
- Use of a standard long-life lithium battery (Type CR-P2)
- for cold and mixed water
- Cold water: 3/8" T-distributor necessary, see accessories Art. No. 65755
- can be used with backflow preventer with dirt filter, see accessories art. no. 70247
- Laminar jet controller with dynamic flow control 5 l/min, angle adjustable and anti-theft protection
- adjustable, active, nuisance tripping-resistant infrared sensors
- Electronic module with adjustable sensing range, hygiene flushing, continuous flushing and cleaning mode
- Sensor parameters preset in the factory: after-run time: approx. 1-2 s, continuous running: max. 4 min, sensing range: 200 mm, cleaning mode: 60 s, hygiene flushing is deactivated
- asymmetrical sensing range, stable object detection
- settings and service also possible by means of app via smartphone, see accessories Art. No. 65713
- safety shutdown in the event of failure of the operating voltage, user-defined settings are retained
- without temperature adjustment lever: hygienic, vandal and misuse resistant
- the preset temperature lies within the comfort zone from 30°C to 36°C
- Temperature settings and adjustment can be easily made during installation due to side access
- Connection via flexible pressure hoses with woven-in hot-cold marking 450 mm long, G 3/8"
- integrated dirt trap screens
- Brass fitting body
- 118 mm high, projection 158 mm
- rigid outlet
- not including waste fittings
- Noise class 1
- suitable for thermal disinfection according to WRAS
- conforms EN 15091
- CE and UKCA marking according to EMC 2014/30/EU

Awards

iF DESIGN AWARD 2017
GERMAN DESIGN AWARD WINNER 2018

HEWI Heinrich Wilke GmbH
Postfach 1260
D-34442 Bad Arolsen

Telephon: +49 5691 82-0
Fax: +49 5691 82-319

info@hewi.de
www.hewi.com