Similar picture

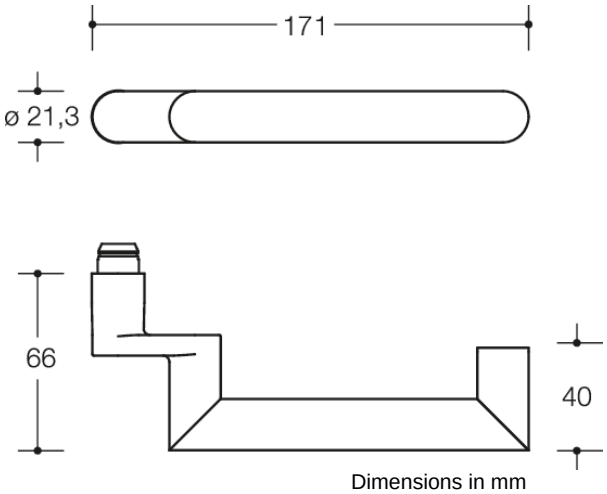

Dimensions in mm

Properties
Interior door set
in R-technology with roses according to DIN 18255 and EN 1906 made of matt polyamide, high gloss surface, consisting of:
Lever handle model 166.21PB... in mitre cut, made of matt polyamide with continuous steel core into the end of the lever handle, solid colour, diameter 21.3 mm, with stepped shoulder guide and groove, easily installed by latching the lever handle into the base parts pre-mounted on the door. The lever handle fulfils the guidelines of the German Federal Association of Accident Insurers Bundesverbandes der Unfallkassen e. V." - BUK (safety margin to closing edge 25 mm).
The latching can be released using the dismantling tool. The lever handle meets the standards of EN 179.
Roses: model 315.21PB... and 316PBR, rose substructure made of synthetic material-stainless steel composite, can be used for left or right-hand opening doors. Fixed rotating bearing of the lever handle with automatically latching all-round locking and 5 mm journal as maintenance-free plain bearing with elastic compensating area and second journal in the neck of the lever handle. Concealed, non-loosening screwed joint.
Rose cover cap, oval, made of matt polyamide, stained consistently, 32 x 72 mm, 12 mm high, 1.5 mm wall thickness.
Designed and tested for contract use, category of use according to EN 1906 - Class 4 fittings with square spindle 8 - 8.5 mm
Category of use: Class 4
Durability: Class 7
Door mass: No classification specified
Fire resistance: Class 0
Security: Class 1
Corrosion resistance: Class 5
Anti-burglar protection: Class 0
Design type: U
Sustainability: EPD Environmental Product Declaration

Awards

Certificates

HEWI Heinrich Wilke GmbH
Postfach 1260
D-34442 Bad Arolsen
Telephon: +49 5691 82-0
Fax: +49 5691 82-319
info@hewi.de
www.hewi.com

Colours / Surfaces

99 (pure white)
90 (jet black)

HEWI Heinrich Wilke GmbH
Postfach 1260
D-34442 Bad Arolsen

Telephon: +49 5691 82-0
Fax: +49 5691 82-319

info@hewi.de
www.hewi.com