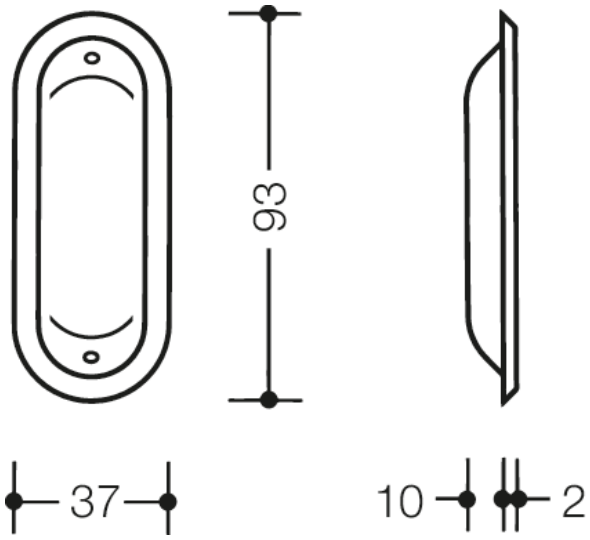

Dimensions in mm

Properties

Flush pull design 542
made of solid coloured high-quality matt polyamide, oval shape 93 x 37 mm, recess dimensions 83 x 30 mm, recess depth 10 mm, with grip recess.

Awards

Colours / Surfaces

99 (pure white)
90 (jet black)

HEWI Heinrich Wilke GmbH
Postfach 1260
D-34442 Bad Arolsen

Telephon: +49 5691 82-0
Fax: +49 5691 82-319

info@hewi.de
www.hewi.com