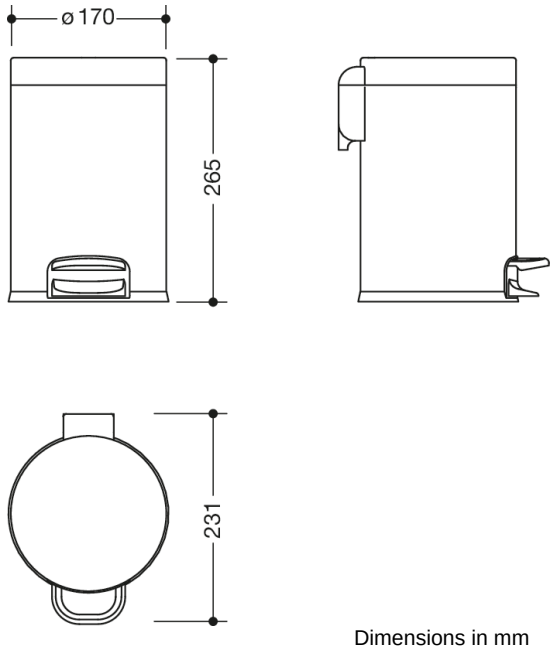

Dimensions in mm

Properties

Waste bin

- cylindrical body
- capacity 3 litres
- lid with soft close function
- foot pedal
- with removable black inner bin made of synthetic material
- floor standing, operated via foot pedal
- height 265 mm, diameter 170 mm
- made of stainless steel, matt white coating

HEWI Heinrich Wilke GmbH
Postfach 1260
D-34442 Bad Arolsen

Telephon: +49 5691 82-0
Fax: +49 5691 82-319

info@hewi.de
www.hewi.com